AWNING SYSTEMS

PRICE LIST 2022

PALMIYE

Four Seasons Outdoor Living Areas

PALMIYE
Four Seasons Outdoor Living Areas

AWNING SYSTEMS

INDEX

PRODUCT PRICE LIST

STOREXY	*P.3*
WINDSTOR 100	*P.5*
WINDSTOR 120	*P.7*
PENTE	*P.9*
LIBERTY	*P.11*
PLATINUM	*P.13*

EXTERNAL VERTICAL BLIND

STOREXY

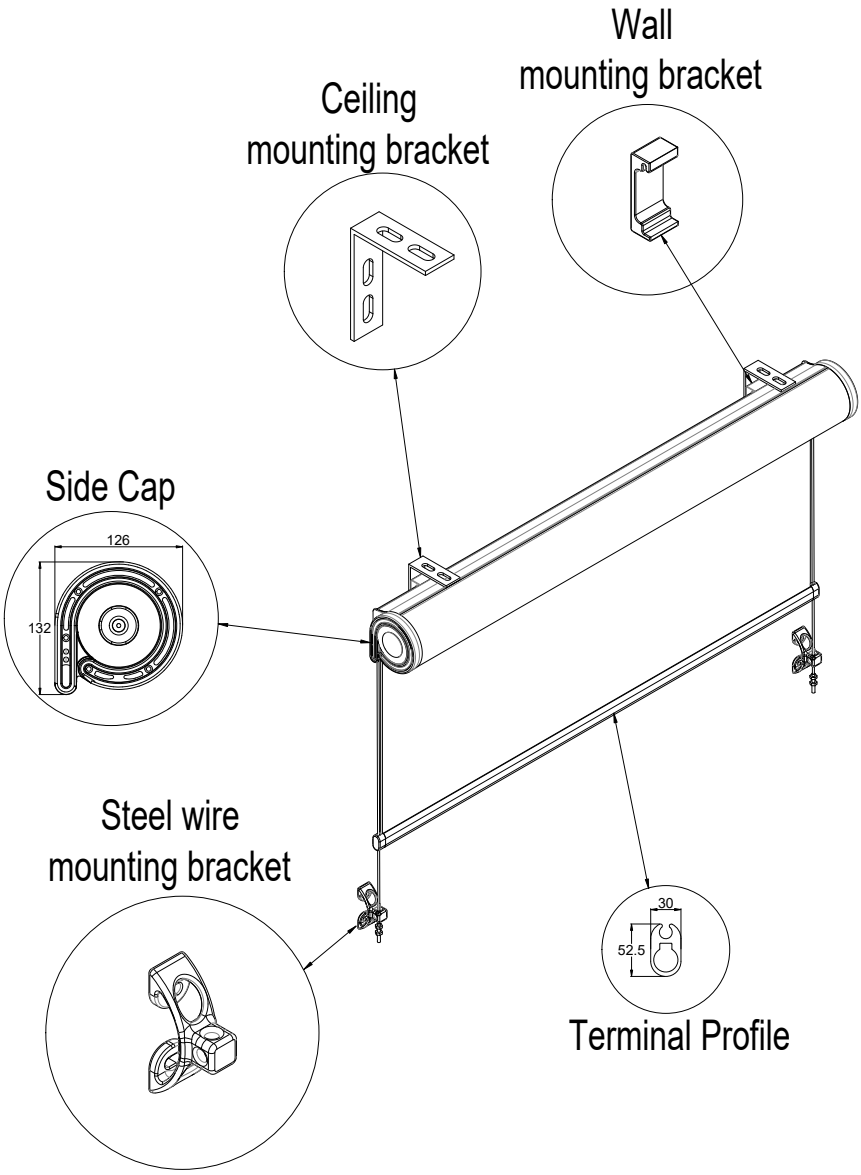

EXTERNAL VERTICAL BLIND

STOREXY

With Acrylic Fabric

Height	Width						
	120cm	180cm	240cm	300cm	360cm	420cm	480cm
100cm	€ 614	€ 706	€ 802	€ 893	€ 899	€ 1.079	€ 1.176
200cm	€ 682	€ 805	€ 931	€ 1.056	€ 1.182	€ 1.308	€ 1.436
250cm	€ 746	€ 903	€ 1.062	€ 1.221	€ 1.378	€ 1.533	€ 1.696

With Stam 6002 Fabric

Height	Width						
	120cm	180cm	240cm	300cm	360cm	420cm	480cm
100cm	€ 626	€ 721	€ 818	€ 911	€ 917	€ 1.101	€ 1.199
200cm	€ 695	€ 821	€ 950	€ 1.077	€ 1.206	€ 1.334	€ 1.465
300cm	€ 761	€ 922	€ 1.083	€ 1.245	€ 1.405	€ 1.564	€ 1.730

With Soltis 86 or 92 Fabric

Height	Width						
	120cm	180cm	240cm	300cm	360cm	420cm	480cm
100cm	€ 638	€ 740	€ 848	€ 950	€ 968	€ 1.161	€ 1.268
200cm	€ 728	€ 875	€ 1.023	€ 1.171	€ 1.321	€ 1.469	€ 1.621
300cm	€ 816	€ 1.007	€ 1.201	€ 1.394	€ 1.585	€ 1.776	€ 1.974

With Soltis W96 Fabric

Height	Width						
	120cm	180cm	240cm	300cm	360cm	420cm	480cm
100cm	€ 649	€ 759	€ 873	€ 982	€ 1.005	€ 1.204	€ 1.318
200cm	€ 753	€ 912	€ 1.074	€ 1.234	€ 1.395	€ 1.557	€ 1.720
300cm	€ 853	€ 1.063	€ 1.275	€ 1.487	€ 1.698	€ 1.907	€ 2.123

Options:		
Extra Cost for Colour Combination	€ 92	
Sun Sensor (SUNIS)	€ 534	pcs
Wind Sensor (EOLIS RTS)	€ 250	pcs
Sun and Wind Sensor (SOLIRIS RTS)	€ 283	pcs
Motorized Price Difference	€ 569	pcs

1. Palmiye Aluminium Coating Catalogue includes the standard colours with no extra cost. For any other type/brand/coulor of paint, price difference and additional delivery duration shall be checked from your customer representative.
2. This Product is operated manually as standard.
3. Two colours should be picked from standard Palmiye Aluminum Coating Catalogue for colour combination. One colour will be applied to the casette, other colour will be applied to the side caps.

VERTICAL ZIP BLIND

WINDSTOR

100

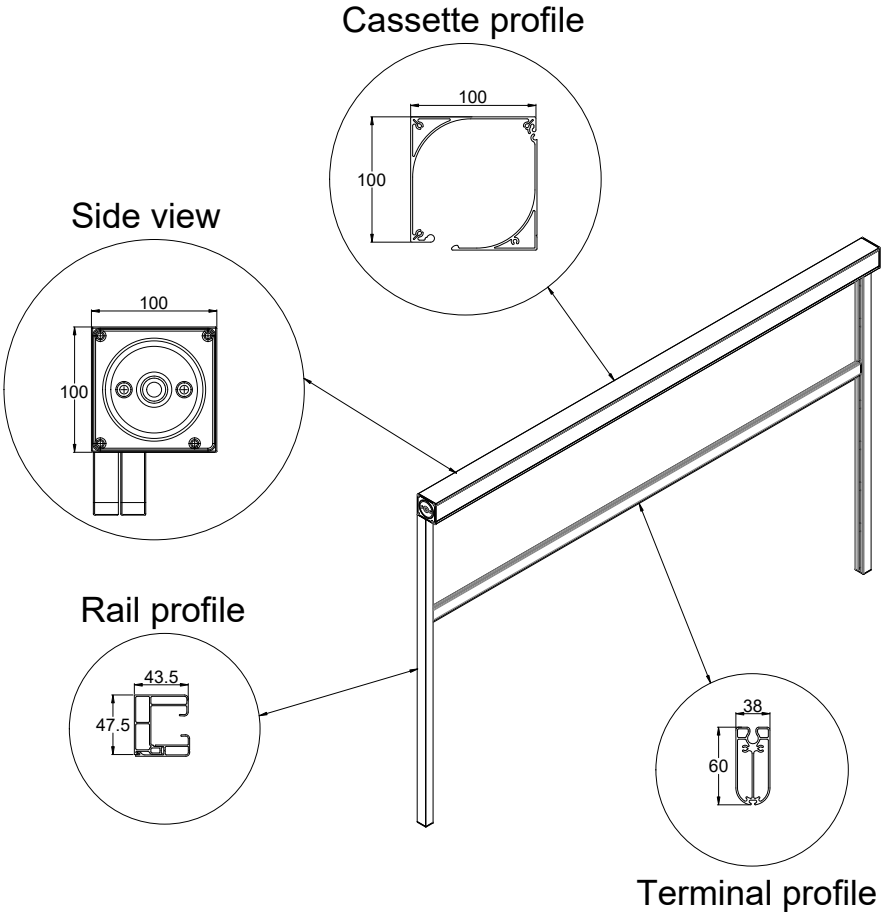

VERTICAL ZIP BLIND

WINDSTOR

100

With Soltis VEOZIP Fabric

Height \ Width	100 cm	150 cm	200 cm	250 cm	300 cm	350 cm	400 cm
100 cm	€ 1.237	€ 1.375	€ 1.513	€ 1.600	€ 1.743	€ 1.888	€ 2.080
150 cm	€ 1.335	€ 1.470	€ 1.604	€ 1.694	€ 1.836	€ 2.019	€ 2.244
200 cm	€ 1.439	€ 1.565	€ 1.694	€ 1.787	€ 1.930	€ 2.149	€ 2.407
250 cm	€ 1.536	€ 1.658	€ 1.779	€ 1.889	€ 2.099	€ 2.298	€ 2.566
280 cm	€ 1.634	€ 1.749	€ 1.865	€ 1.990	€ 2.268	€ 2.447	€ 2.727

Options:		
Sun Sensor (SUNIS)	€ 534	pcs
Wind Sensor (EOLIS RTS)	€ 250	pcs
Sun and Wind Sensor (SOLIRIS RTS)	€ 283	pcs

1. Palmiye Aluminium Coating Catalogue includes the standard colours with no extra cost. For any other type/brand/coulor of paint, price difference and additional delivery duration shall be checked from your customer representative.
2. This product is operated with motor as standard.

VERTICAL ZIP BLIND

WINDSTOR

120

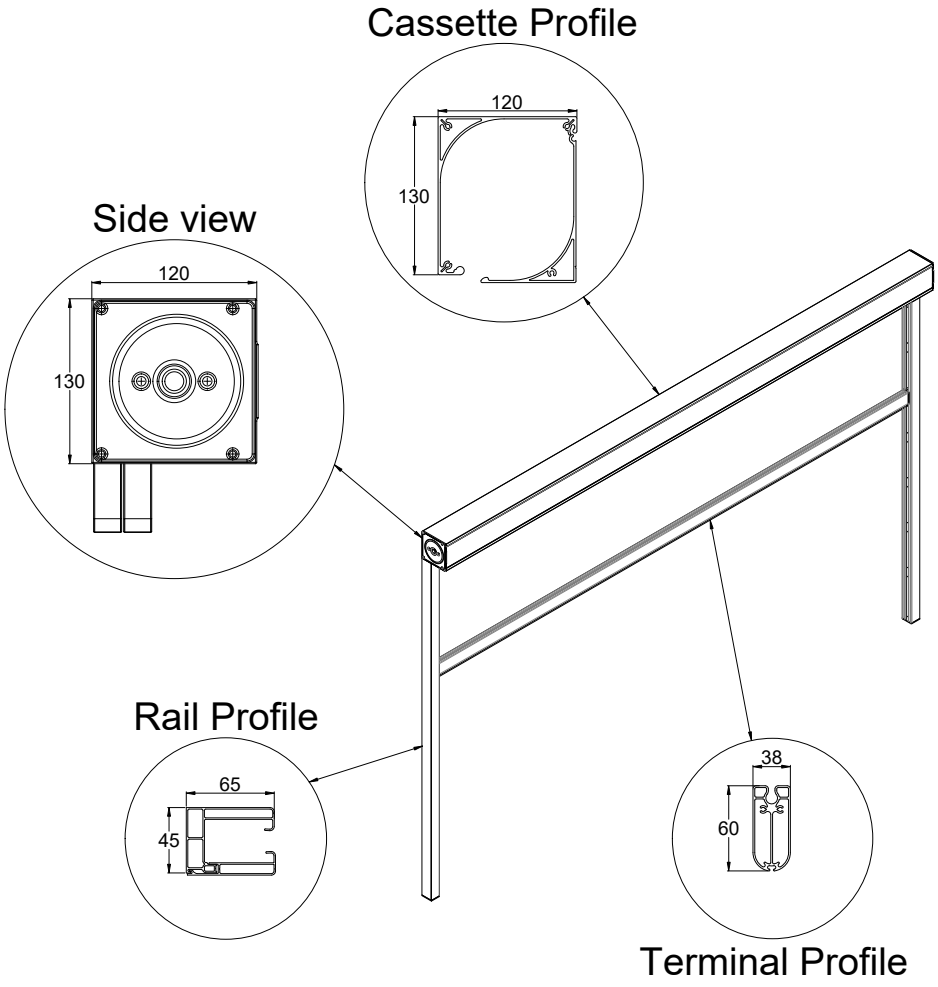

VERTICAL ZIP BLIND

WINDSTOR

120

With Soltis VEOZIP Fabric

Height \ Width	100 cm	150 cm	200 cm	250 cm	300 cm	350 cm	400 cm	450cm	500cm
100 cm	€ 1.348	€ 1.501	€ 1.656	€ 1.754	€ 1.914	€ 2.078	€ 2.295	€ 2.512	€ 2.728
150 cm	€ 1.457	€ 1.607	€ 1.757	€ 1.859	€ 2.019	€ 2.224	€ 2.478	€ 2.731	€ 2.985
200 cm	€ 1.573	€ 1.714	€ 1.858	€ 1.964	€ 2.124	€ 2.370	€ 2.659	€ 2.949	€ 3.238
250 cm	€ 1.682	€ 1.818	€ 1.954	€ 2.078	€ 2.313	€ 2.537	€ 2.839	€ 3.140	€ 3.442
280 cm	€ 1.792	€ 1.921	€ 2.050	€ 2.191	€ 2.502	€ 2.704	€ 3.020	€ 3.336	€ 3.652

Options:		
Sun Sensor (SUNIS)	€ 534	pcs
Wind Sensor (EOLIS RTS)	€ 250	pcs
Sun and Wind Sensor (SOLIRIS)	€ 283	pcs

1. Palmiye Aluminium Coating Catalogue includes the standard colours with no extra cost. For any other type/brand/coulor of paint, price difference and additional delivery duration shall be checked from your customer representative.
2. This product is operated with motor as standard.

DROP ARM AWNING

PENTE

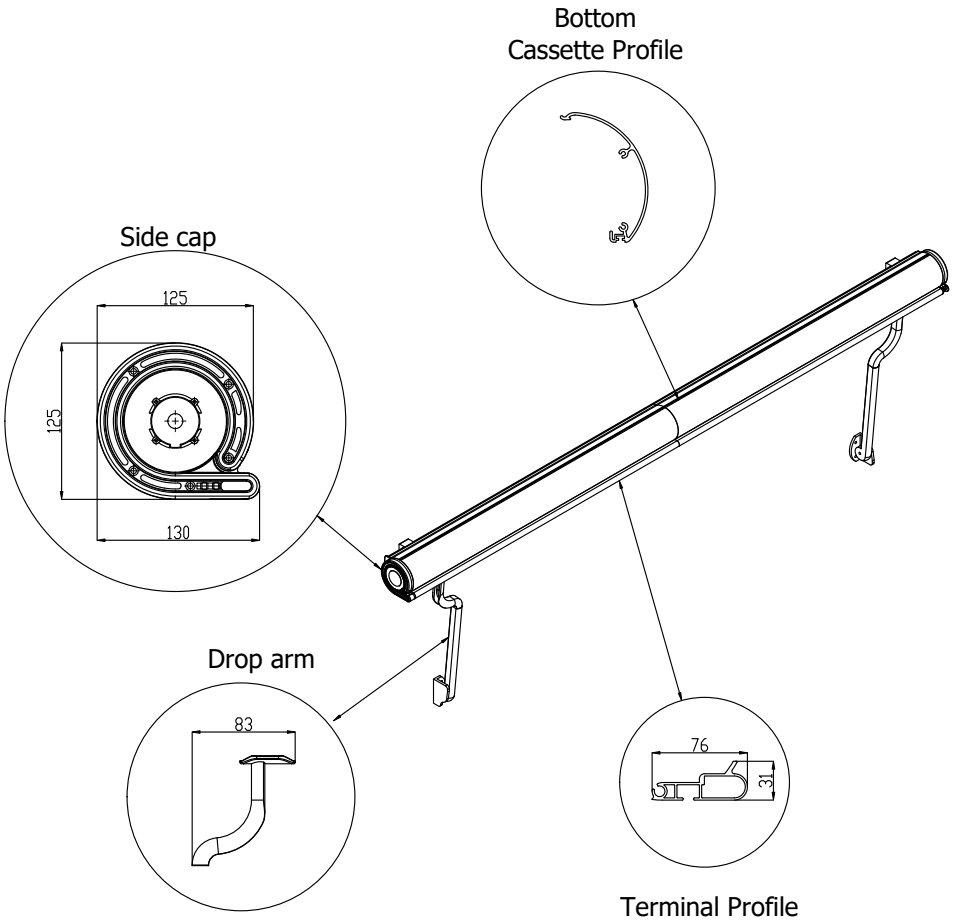

DROP ARM AWNING

PENTE

With Acrylic Fabric

Projection	Width						
	120cm	180cm	240cm	300cm	360cm	420cm	480cm
160cm (80cm arm)	€ 1.381	€ 1.485	€ 1.591	€ 1.696	€ 1.802	€ 1.907	€ 2.015
240cm (120cm arm)	€ 1.451	€ 1.581	€ 1.712	€ 1.842	€ 1.972	€ 2.102	€ 2.236

With Stam 6002 Fabric

Projection	Width						
	120cm	180cm	240cm	300cm	360cm	420cm	480cm
160cm (80cm arm)	€ 1.347	€ 1.464	€ 1.582	€ 1.699	€ 1.817	€ 1.934	€ 2.055
240cm (120cm arm)	€ 1.431	€ 1.580	€ 1.731	€ 1.882	€ 2.031	€ 2.182	€ 2.336
320cm (160cm arm)	€ 1.517	€ 1.697	€ 1.881	€ 2.064	€ 2.247	€ 2.429	€ 2.614

With Soltis 86 or 92 Fabric

Projection	Width						
	120cm	180cm	240cm	300cm	360cm	420cm	480cm
160cm (80cm arm)	€ 1.418	€ 1.541	€ 1.665	€ 1.788	€ 1.913	€ 2.036	€ 2.163
240cm (120cm arm)	€ 1.507	€ 1.664	€ 1.822	€ 1.981	€ 2.138	€ 2.297	€ 2.458
320cm (160cm arm)	€ 1.597	€ 1.787	€ 1.980	€ 2.172	€ 2.365	€ 2.556	€ 2.752

With Soltis W96 Fabric

Projection	Width						
	120cm	180cm	240cm	300cm	360cm	420cm	480cm
160cm (80cm arm)	€ 1.437	€ 1.572	€ 1.705	€ 1.839	€ 1.972	€ 2.106	€ 2.243
240cm (120cm arm)	€ 1.538	€ 1.708	€ 1.882	€ 2.055	€ 2.229	€ 2.402	€ 2.577
320cm (160cm arm)	€ 1.637	€ 1.846	€ 2.060	€ 2.272	€ 2.484	€ 2.696	€ 2.911

Options:		
Extra Cost for Colour Combination	€ 123	
Sun Sensor (SUNIS)	€ 534	pcs
Wind Sensor (EOLIS RTS)	€ 250	pcs
Sun and Wind Sensor (SOLIRIS RTS)	€ 283	pcs

1. Palmiye Aluminium Coating Catalogue includes the standard colours with no extra cost. For any other type/brand/coulor of paint, price difference and additional delivery duration shall be checked from your customer representative.
2. This product is operated with motor as standard.
3. Two colours should be picked from standard Palmiye Aluminum Coating Catalogue for colour combination. One colour will be applied to the casette, other colour will be applied to the side caps.
4. If the manual option is selected, €568 will be reduced from the product price.

RETRACTABLE AWNING

LIBERTY

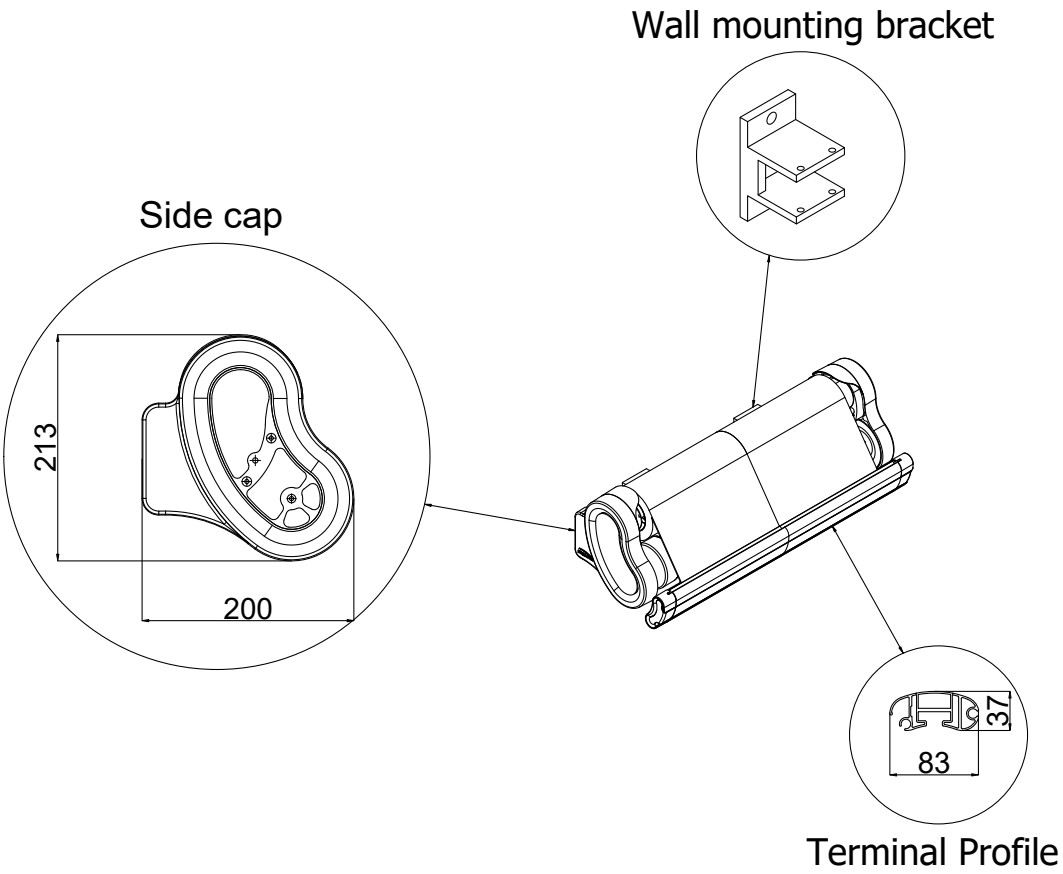

RETRACTABLE AWNING

LIBERTY

With Acrylic Fabric

Projection \ Width	220cm	300cm	360cm	420cm	480cm	550cm
160cm	€ 1.302	€ 1.385	€ 1.471	€ 1.557	€ 1.641	€ 1.743
210cm		€ 1.486	€ 1.585	€ 1.688	€ 1.789	€ 1.905
260cm		€ 1.593	€ 1.711	€ 1.828	€ 1.943	€ 2.079
310cm			€ 1.911	€ 2.046	€ 2.177	€ 2.328
360cm				€ 2.236	€ 2.382	€ 2.555
Extra Cost for Colour Combination	€ 108	€ 125	€ 142	€ 159	€ 175	€ 192
Valance price difference	€ 179	€ 224	€ 268	€ 313	€ 358	€ 410

Options:		
Sun Sensor (SUNIS)	€ 534	pcs
Wind Sensor (EOLIS RTS)	€ 250	pcs
Wind Sensor (EOLIS 3D)	€ 274	pcs
Sun and Wind Sensor (SOLIRIS RTS)	€ 283	pcs
Motorised price difference	€ 569	pcs
Manual + Motorised control price difference	€ 136	pcs

1. Palmiye Aluminium Coating Catalogue includes the standard colours with no extra cost. For any other type/brand/coulor of paint, price difference and additional delivery duration shall be checked from your customer representative.
2. This Product is operated manually as standard.
4. The width of Liberty awning must be 35cm longer than projection.
5. Valance options: Flat / Wavy (Standard valance type is flat and it's dimension is 30cm)
6. Manual + Motor price difference must be added on top of Motorised version's price.
7. Manual + Motor version is available only 230V/50Hz main electricity.
8. Two colours should be picked from standard Palmiye Aluminum Coating Catalogue for colour combination. One colour will be applied to the casette, other colour will be applied to the side caps.

CASSETTE AWNING

PLATINUM

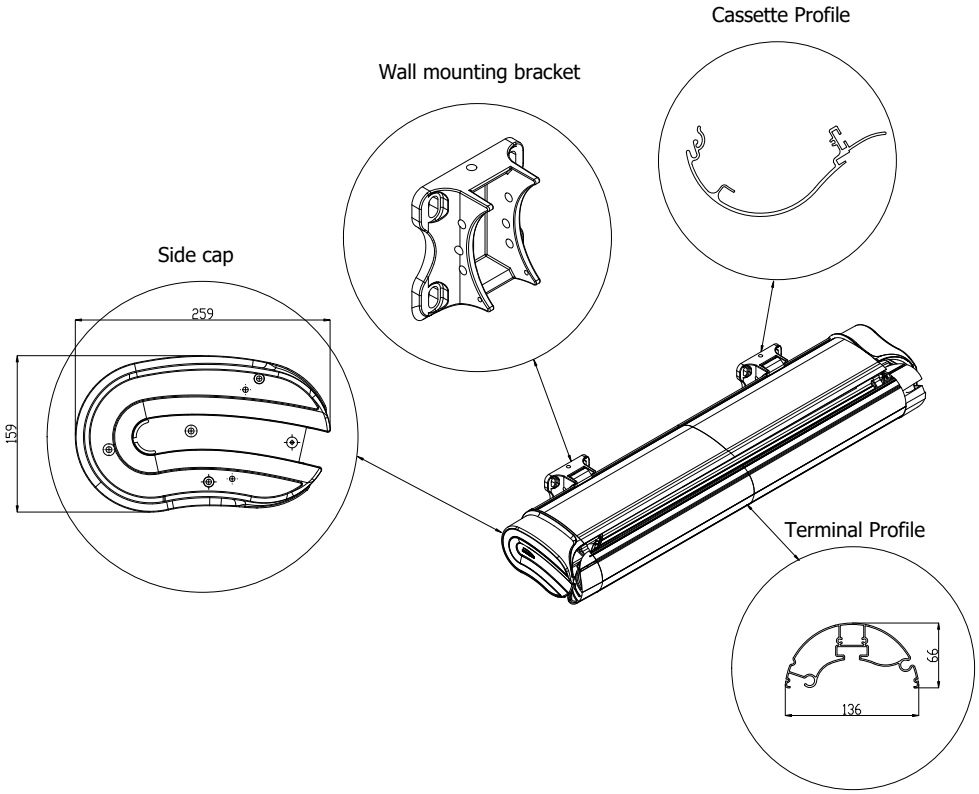

CASSETTE AWNING

PLATINUM

with Acrylic Fabric

Projection \ Width	205cm	300cm	360cm	420cm	480cm	540cm	600cm	700cm
160cm	€ 2.407	€ 2.577	€ 2.746	€ 2.915	€ 3.243	€ 3.412	€ 3.585	€ 3.868
210cm		€ 2.690	€ 2.877	€ 3.061	€ 3.406	€ 3.594	€ 3.779	€ 4.091
260cm			€ 3.012	€ 3.146	€ 3.574	€ 3.779	€ 3.980	€ 4.319
310cm			€ 3.223	€ 3.441	€ 3.819	€ 4.039	€ 4.257	€ 4.624
360cm				€ 3.643	€ 4.036	€ 4.273	€ 4.507	€ 4.901

Extra Cost for Colour Combination	€ 123	€ 140	€ 159	€ 175	€ 192	€ 209	€ 226	€ 243
Valance price difference	€ 179	€ 224	€ 268	€ 313	€ 358	€ 410	€ 455	€ 500

Options:		
Sun Sensor (SUNIS)	€ 534	pcs
Wind Sensor (EOLIS RTS)	€ 250	pcs
Wind Sensor (EOLIS 3D)	€ 274	pcs
Sun and Wind Sensor (SOLIRIS RTS)	€ 283	pcs
Manual + Motorised control price difference	€ 136	pcs

1. Palmiye Aluminium Coating Catalogue includes the standard colours with no extra cost. For any other type/brand/coulor of paint, price difference and additional delivery duration shall be checked from your customer representative.
2. This product is operated motorised as standard.
3. The width of Platinum awning must be 45cm longer than projection.
4. Valance options: Flat / Wavy (Standard valance type is Flat and it's dimension is 30cm)
5. Manual + Motor version is available only 230V/50Hz main electricity.
6. It will have 3 arms and wall/ceiling mounting brackets after 500cm width measurement.
7. Two colours should be picked from standard Palmiye Aluminum Coating Catalogue for colour combination. One colour will be applied to the casette, other colour will be applied to the side caps.

AWNING SYSTEMS

PALMIYE

Four Seasons Outdoor Living Areas

www.palmiye.eu